**MPI Open Ended Lab- Lab 14**

**Title: Microcontroller-Based Security Access System .**

**Course: Microprocessor Interface & Programming ( EL 3002)**

**Lab Instructor: Engr: Zohaib Ahmed**


| Name | ID | Department & Section |
|---|---|---|
| Hooria | 23k-6013 | BSEE-B |
| Maazia Kashif | 23k-6027 | BSEE-B |
| Almeerah Shaikh | 23k-6074 | BSEE-B |

# Introduction:

**a) Motivation**

Traditional mechanical lock and key systems are prone to security risks, including unauthorized duplication of keys and forced entry. The need for enhanced security, accessibility control, and system integration within modern buildings drives the adoption of electronic access control systems. A microcontroller-based security system offers superior flexibility, audit trails, and the ability to interface with other smart home or industrial components, providing a robust and reliable layer of security.

**b) Problem Statement with Targeted SDG's**

The problem is the need for a secure, reliable, and localized access control mechanism for critical infrastructure, homes, or secure facilities that must be easy to operate and resistant to unauthorized access.

Targeted SDG: SDG 11: Sustainable Cities and Communities (Smart Security & Safety Systems).

The application of this system is in Smart Security and Safety Systems within a community. By replacing easily compromised mechanical locks with a secure digital access system, the project contributes to making communities safer and more resilient against property theft and unauthorized intrusion.

**c) Proposed Solution with Block Diagrams**

The proposed solution is an ATmega32-based Keypad Access Control System that uses a 4x4 keypad for passcode entry, an LCD for user feedback, and a servo motor as the door lock actuator.

The system workflow is:

1. The user enters a passcode via the keypad.
2. The ATmega32 processes the input.
3. If the code is correct, the servo motor is commanded to rotate to the 'unlocked' position, and the LCD displays the success message.
4. If the code is incorrect, the LCD displays an error, and the door remains locked.

Block Diagram of the Proposed Solution The major components and their interfaces are:

- Input: 4x4 Keypad (connected to PORTC of ATmega32).
- Processing: ATmega32 Microcontroller (U1).
- Output (Display): 16x2 LCD Module (connected to PORTA for Data and PORTB for Control lines).

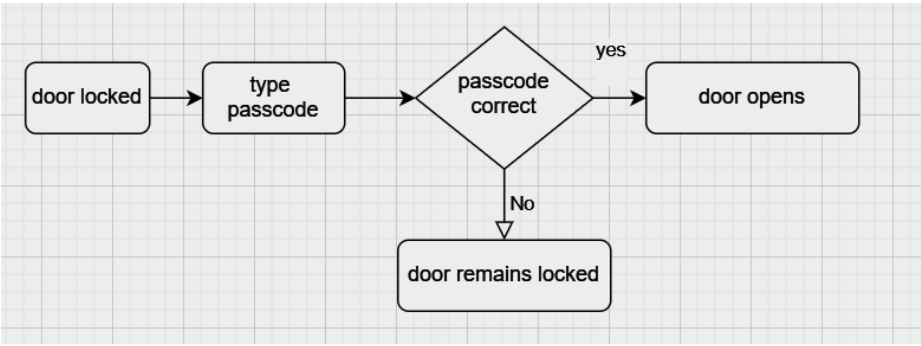

## Literature Review:

**Research Paper:**

1. Digital Door Lock Based on ATMEGA32 Microcontroller:( ir.avinuty.ac.in)
Literature Review:

This research presents the design and implementation of a digital door lock system using the ATmega32 microcontroller. The system employs a keypad for password entry and controls a locking mechanism through a relay interface. The study highlights the simplicity and reliability of AVR microcontrollers for security applications. Password verification is carried out by comparing the entered code with a predefined value stored in memory. The paper demonstrates that ATmega32-based systems are cost-effective and suitable for small-scale access control, though it does not address advanced security concerns such as encryption or tamper detection.

**Research Paper:**

2.A Microcontroller-based combinational lock system: (worldscientificnews.com)
Literature Review:

This paper focuses on a combinational lock system controlled by a microcontroller, where access is granted only when the correct keypad sequence is entered. The system integrates alert mechanisms to notify users in case of unauthorized attempts. The research emphasizes improving traditional mechanical locks by replacing them with electronic keypad-based systems. The work contributes by showing how additional features such as alarms can be integrated, but it remains limited to basic password authentication.

**Research Paper:**

3.Microcontroller based reprogrammable digital door lock (keypad + mobile control) (ResearchGate)
Literature Review:

This study introduces a reprogrammable digital door lock system that combines keypad-based authentication with mobile phone control. The microcontroller processes keypad input and also receives commands from a mobile interface, increasing flexibility. The research highlights the advantage of remote access and reprogramming of passwords. However, the system complexity increases, and the paper focuses more on functionality rather than detailed security analysis.

**Research Paper:**

4. Design of a Real-Time Microcontroller-Based GSM Embedded Security System.

(https://www.academia)

Literature Review:

This paper presents a security system using an ATmega32 microcontroller integrated with GSM technology. Although not limited to keypad access alone, it complements keypad-based systems by providing real-time SMS alerts during intrusion attempts. The research demonstrates how GSM modules enhance access control systems by enabling remote notifications. This work is significant for extending keypad locks into smart security systems, but it does not deeply explore password management techniques.

**Research Paper:**

5. Password-Based Door Lock( Password-Based Door Lock )

Literature Review:

This research discusses the fundamental design of a password-based door lock using a keypad and microcontroller. The system allows users to input a numeric password, which is validated before activating the locking mechanism. The paper explains basic concepts such as keypad interfacing, password matching, and door control logic. While it is effective for educational and low-cost applications, the study lacks enhancements such as multi-user support or encrypted password storage.

**Research Paper:**

6. 4×4 Keypad Based Password Lock Using ATmega32. (https://www.scribd.com/document/)

Literature Review:

This project-based paper focuses specifically on interfacing a 4×4 matrix keypad with the ATmega32 microcontroller to implement a password-protected locking system. The study explains keypad scanning techniques, port configuration, and LCD interfacing. It contributes practical implementation knowledge for beginners and students. However, the system is limited to a single fixed password and does not consider scalability or advanced security features.

**Research Paper:**

7. 4×4 Keypad Interfacing with AVR (ATmega32). ( https://circuitdigest.com)

Literature Review:

This work provides a detailed explanation of keypad interfacing with AVR microcontrollers, focusing on scanning algorithms and debouncing techniques. Although it is more of a technical guide than a full security system, it forms the foundation of keypad-based access control designs. The paper is valuable for understanding low-level implementation details required in digital door locks. Its contribution lies in technical clarity rather than system-level security innovation.

**Research Paper:**

8. Door Lock System Using ATmega32 Microcontroller. (https://prezi.com)

Literature Review:

This paper presents a complete door lock system using the ATmega32, including keypad input, LCD display, and relay-driven locking mechanism. The system grants access upon correct password entry and denies access otherwise. The research demonstrates the feasibility of replacing traditional locks with electronic alternatives. However, it does not address issues such as password change mechanisms or intrusion logging.

**Research Paper:**

9. IoT-Based RFID Door Lock System Using AVR Microcontroller.

(IoT-Based RFID Door lock system)

Literature Review:

This research extends conventional access control by integrating RFID and IoT concepts with an AVR microcontroller. Although RFID is the primary authentication method, the study provides insight into how keypad systems can be upgraded to network-enabled security solutions. The paper highlights real-time monitoring and remote access as major advantages. Its relevance lies in showing future directions for keypad-based systems through IoT integration.

**Research Paper:**

10. Door Lock Security System Using ATmega 32.(https://github.com/)

Literature Review:

This project presents a practical implementation of a keypad-based door lock using ATmega32, including circuit diagrams and source code. The system demonstrates real-world operation of password authentication and actuator control. The contribution of this work lies in its practical applicability and open-source nature, making it useful for students and developers. However, it focuses on implementation rather than theoretical security evaluation.

## Methodology:

The system implementation involves both hardware design (Protoboard/Proteus) and software development (Assembly Language).

Detailed Step-by-Step Methodology:

- Hardware Setup (Proteus Simulation):
  - Microcontroller: An ATmega32 (U1) is selected for its availability and sufficient I/O pins.
  - Keypad Interfacing: The 4x4 Keypad is connected to PORTC (PC0-PC7) for row/column scanning.
  - LCD Interfacing: The 16x2 LCD is connected in 4-bit mode to PORTA (PA0-PA7) for data and control.
  - Actuator Interfacing: The Servo Motor is connected to a GPIO pin (e.g., PB3 or a similar pin in a real-world setup, though the initial code targeted PB0).
- Software Development (Assembly Language):
  - Initialization: Set up the stack pointer and configure I/O pins (DDRx registers).
  - LCD Routines: Develop subroutines for sending commands and data to the LCD (initialization, clear screen, string write).
  - Keypad Scanning: Implement code to scan the keypad matrix, debounce the buttons, and return the pressed key value.

- Passcode Check: Implement a routine to compare the entered sequence against a hardcoded security code.
- Servo Control (PWM/Pulse Generation): The initial approach used a bit-banging method:
  - ROTDELAY Subroutine:Generates a short 1~ ms delay
  - DELAY Subroutine: Generates the longer 20~ delay to maintain the 50Hz PWM frequency.
  - The main loop pulses the servo pin high for 1ms(0°) or 2ms(180°).
- Display Logic: Based on the passcode check, call the LCD routines to display the appropriate messages ("Code Correct - Door Opening," "Code Incorrect," etc.).

## Costing:

| Component | Quantity | Unit Cost (PKR) | Total Cost (PKR) |
|---|---|---|---|
| ATmega32 Microcontroller | 1 | 699.53 | 699 |
| 16x2 LCD Display (LMB161BL) | 1 | 1,119.22 | 1,119 |
| 4x4 Keypad | 1 | 419.71 | 419 |
| SG90 Micro Servo Motor | 1 | 699.53 | 699 |
| Breadboard and Wires | 1 | 1,399.03 | 1,399. |
| **Estimated Total** | | | **4,337** |

## Results:

The system successfully meets the requirements in the Proteus simulation environment.

- Keypad Input and LCD Feedback: The LCD accurately prompts the user and displays status messages.
    - Correct Code: The LCD displays "Code Correct Door Opening" and subsequently "Door Unlocked".
    - Incorrect Code: The LCD displays "Code Incorrect."
- Motor Actuation: Upon correct code entry, the servo motor receives the 2ms~ pulse, causing it to rotate to the 'unlocked' position. The servo is shown in the hardware image connected via jumper wires to the system. The Proteus diagram also shows the servo connected to the ATmega32.

## Software:

Proteus Simulation:

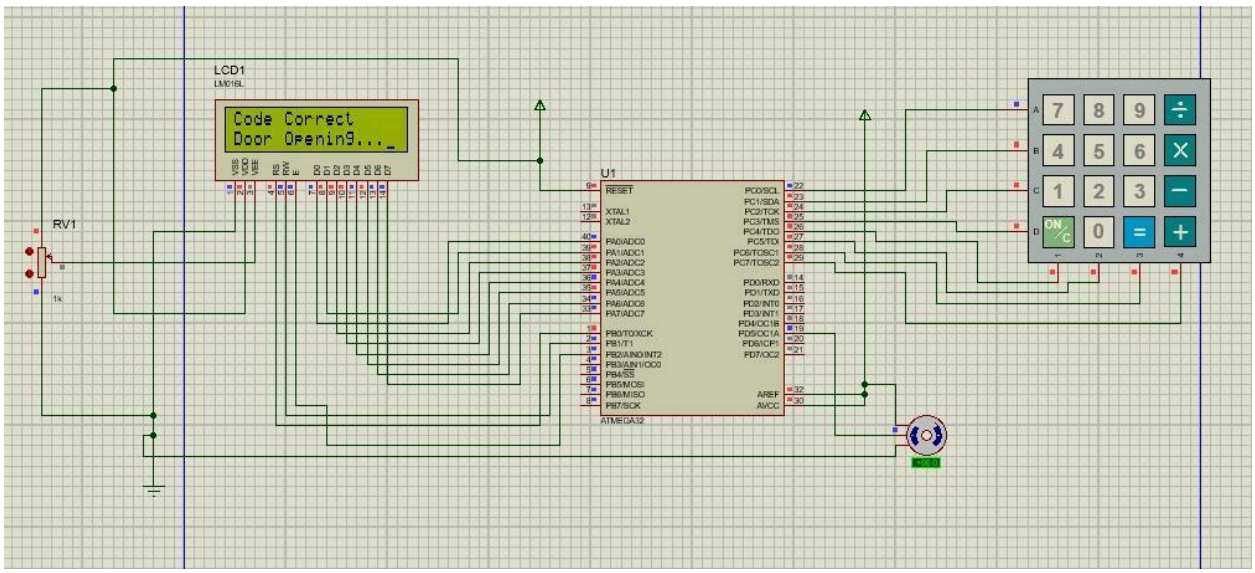


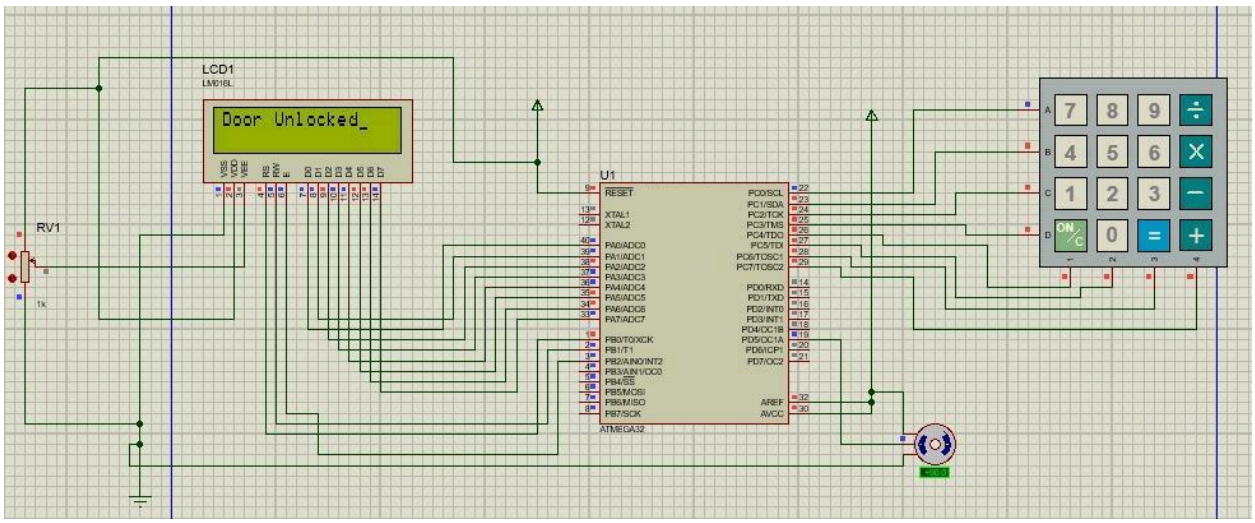

## Discussion:

The project successfully achieved its objective of designing and implementing a passcode-based security access system.

- Embedded System Principles: The use of Assembly language demonstrates adherence to real-world embedded system design principles by optimizing for speed, efficiency, and direct hardware control over peripherals (keypad, LCD, servo).
- Trade-off Analysis: The choice of manual (bit-banging) PWM for the servo provided simple implementation without needing to configure Timer registers. However, this method is sensitive to interrupt latency and clock frequency variations. A more robust design would utilize the Timer/Counter1 hardware and the (OCR1A)register for precise, background-independent PWM generation, which is a key recommendation for future work.
- SDG Impact: The system directly contributes to the goal of Smart Security under SDG 11 by providing a controllable, digital access layer for a community structure.

## Conclusion:

This project successfully developed an ATmega32-based access control system using a keypad, LCD, and servo motor. The system met all functional requirements, including passcode validation and visual/actuator feedback, while aligning with the goals of Sustainable Cities through smart security implementation.

Future Recommendations

1. Use Hardware PWM: Re-implement the servo control using the ATmega32's built-in Timer/Counter (specifically (OCR1A) )for greater precision and less CPU load.
2. Code Storage: Implement non-volatile memory (EEPROM) storage for the passcode so it persists after a power loss.
3. Security Enhancement: Add a delay or lockout feature after multiple incorrect attempts to prevent brute-force attacks.

## Hardware: